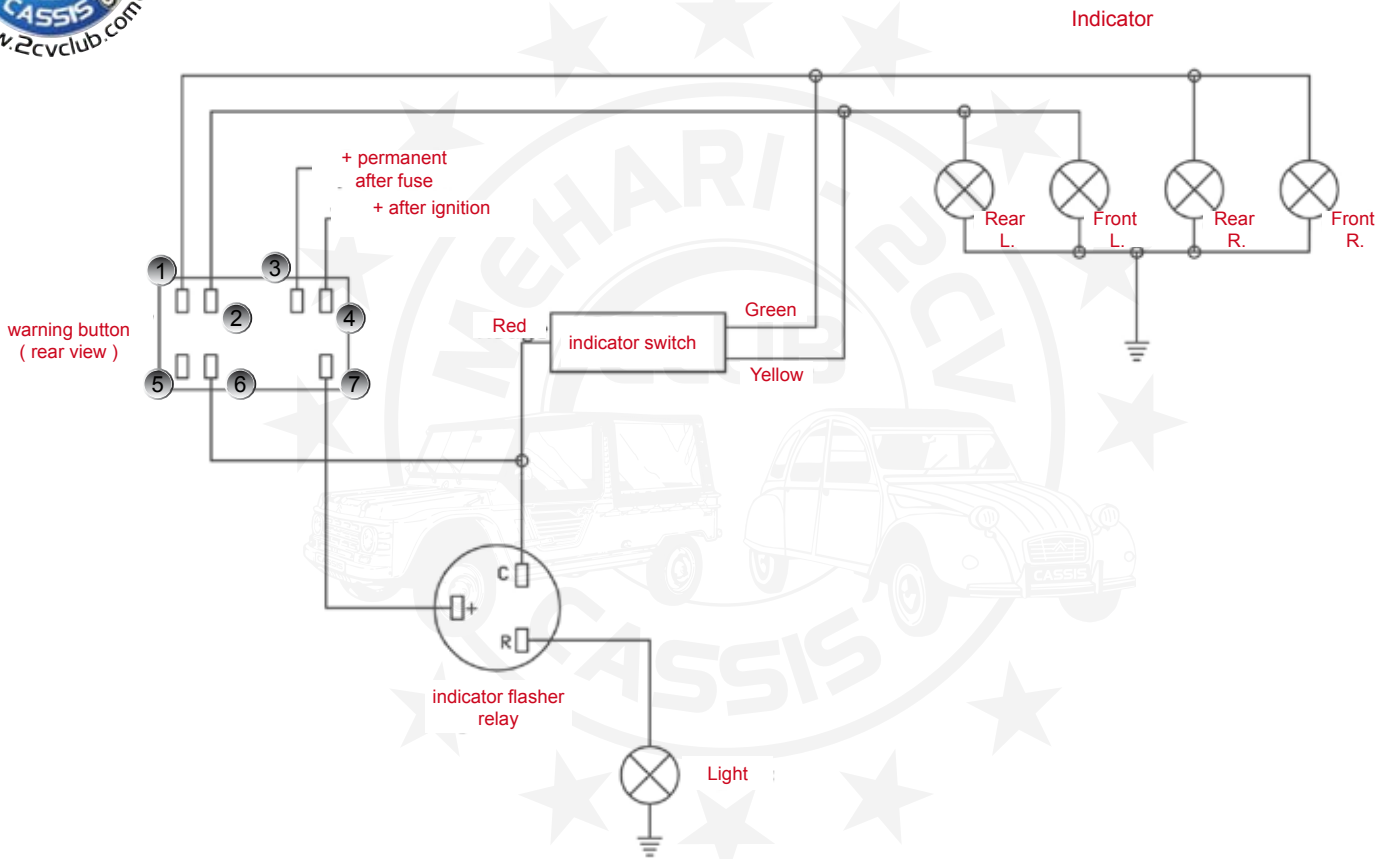Connection Warning 3 pins centrale